Robinetterie
Professionnelle Marine

Vanne antiblocage à sphère Guidi

Guidi "non-stick" and ball valves

2400

Vanne à passage total FF
Lever operated ball valve F-F full fl ow

Homologation RINA
RINA validated

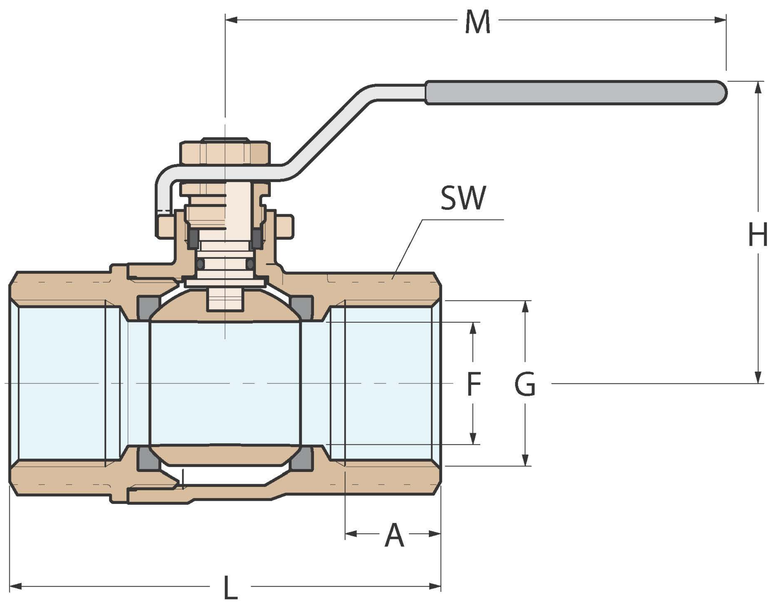

FILETAGE/ THREAD : G =
EN 10226/1 (BS 21)

2400	■	■	■	■	■	■	■
Weight (gr)	190	280	390	600	990	1200	2000
SW	22	26	32	41	50	55	69
M	78	78	98	98	128	128	158
H	48	49	56	60	72	77	88
L	54	65	72	86	99	107	128
F	12	14.8	19.5	24.5	31.5	38.5	48
A	11.4	15	16.3	19.1	21.4	21.4	25.7
G	**3/8"**	**1/2"**	**3/4"**	**1"**	**1"1/4**	**1"1/2**	**2"**

Bronze ■
Bronze

Diagramme de pression - perte de charge
Flow rate - loss of pressure diagram

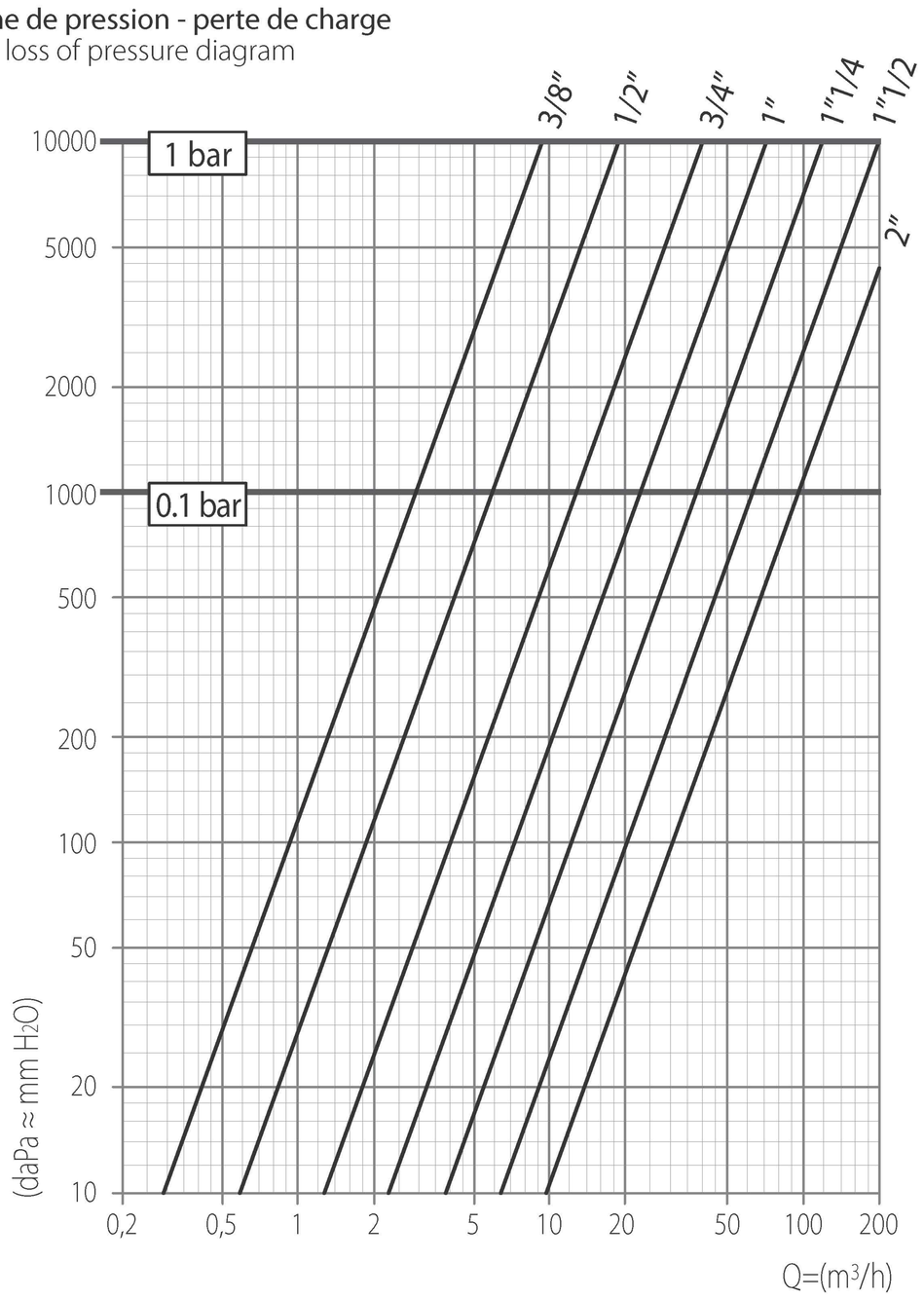

Corps en bronze
Bronze body

Guarnison en PTFE
PTFE gaskets

Levier en inox
Stainless steel lever

G	1 bar
3/8"	9000
1/2"	18000
3/4"	39000
1"	71000
1"1/4	119000
1"1/2	196000
2"	300000

Capacité de pression - lt/h
Flow-rate capacity - lt/h